Gaius Sense basins,

installation instructions

62022, 62023, 62033, 62034
62081, 62082, 62085, 62086
65000, 65001

622705

622720

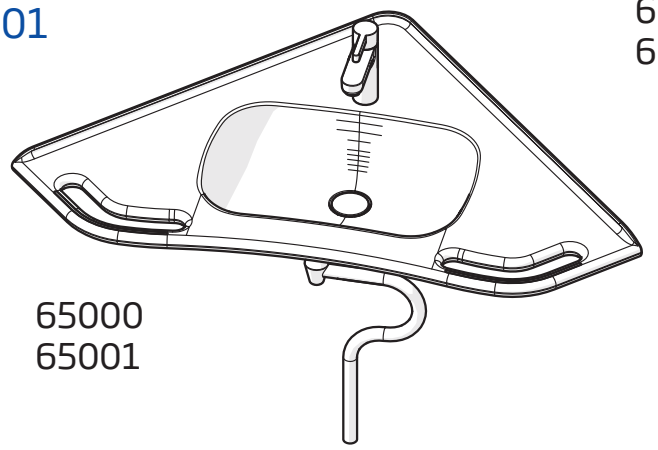

65000
65001

622705
622720

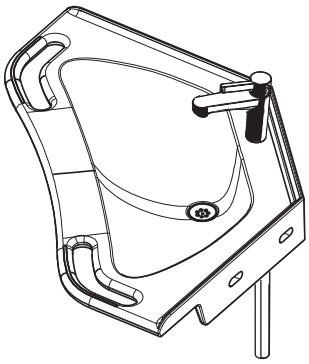

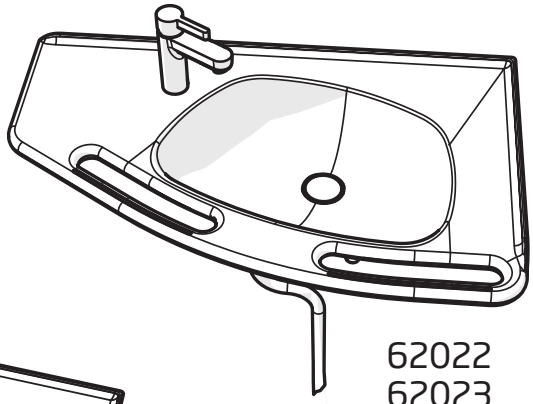

62022
62023
62034
62033

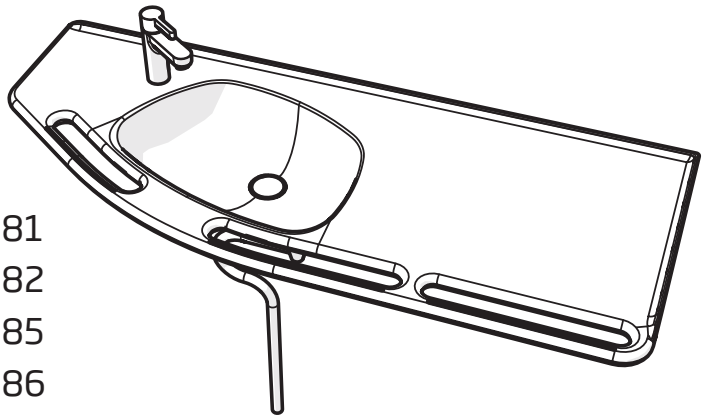

62081
62082
62085
62086

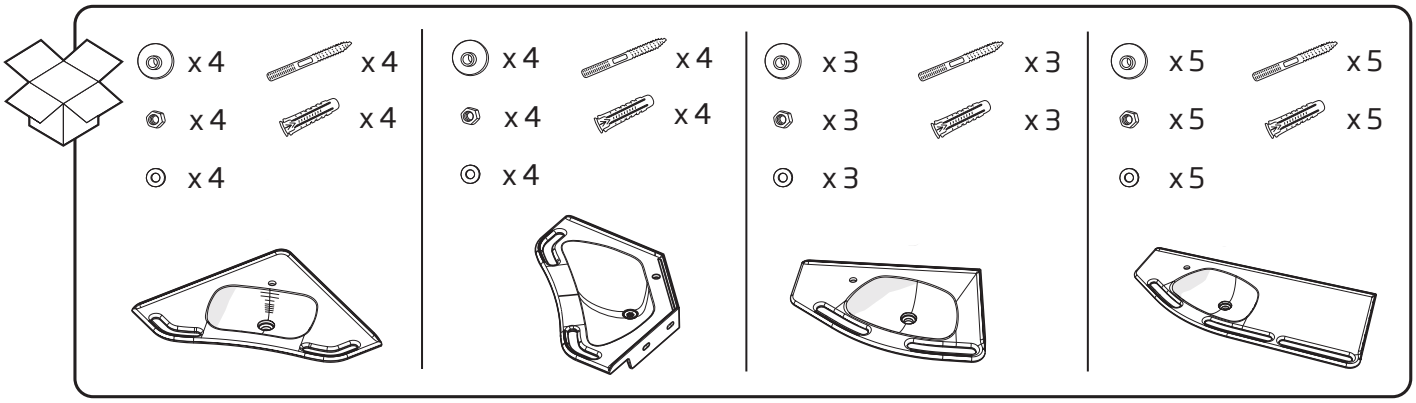

gaius

02/2020
korpinen.com

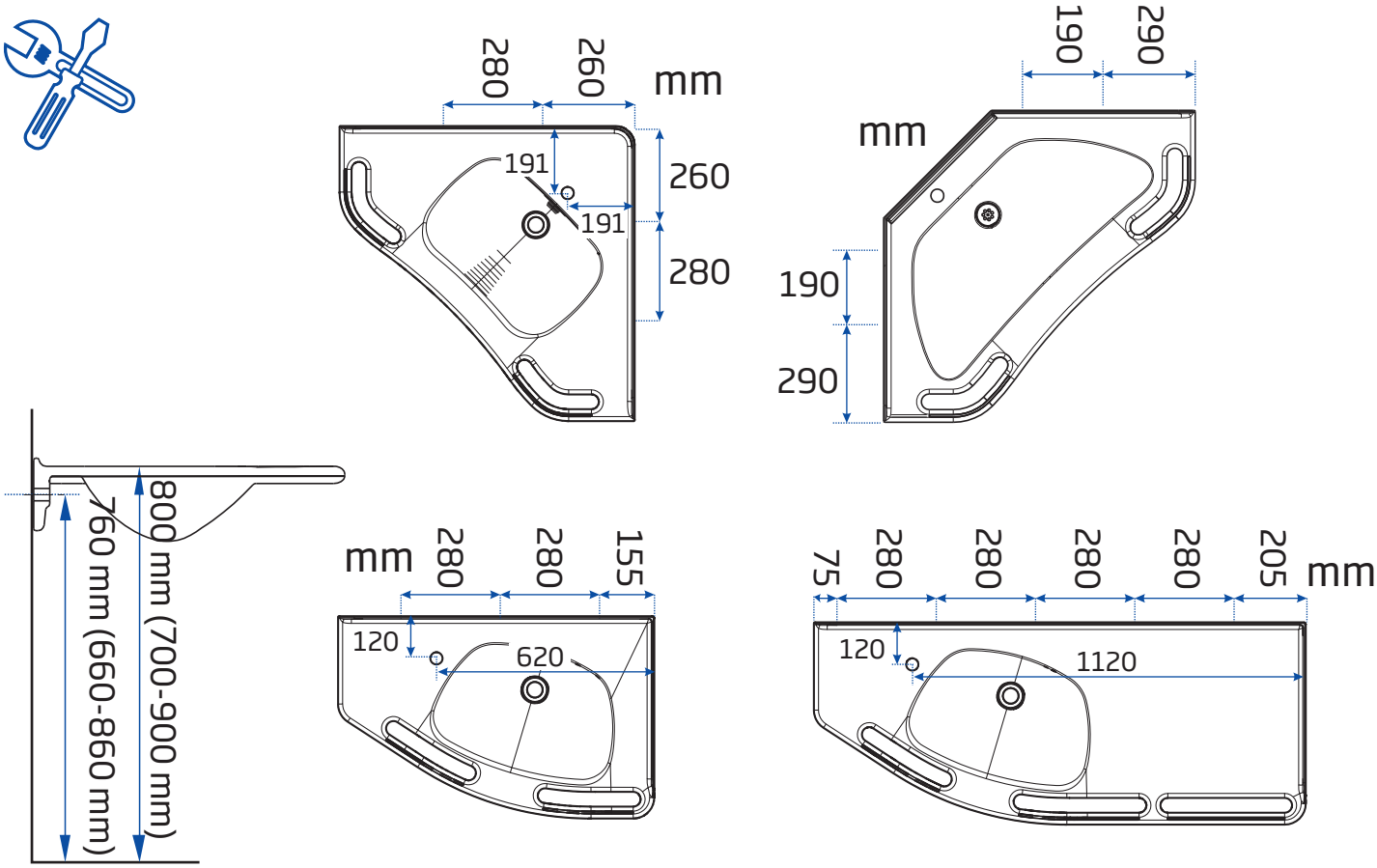

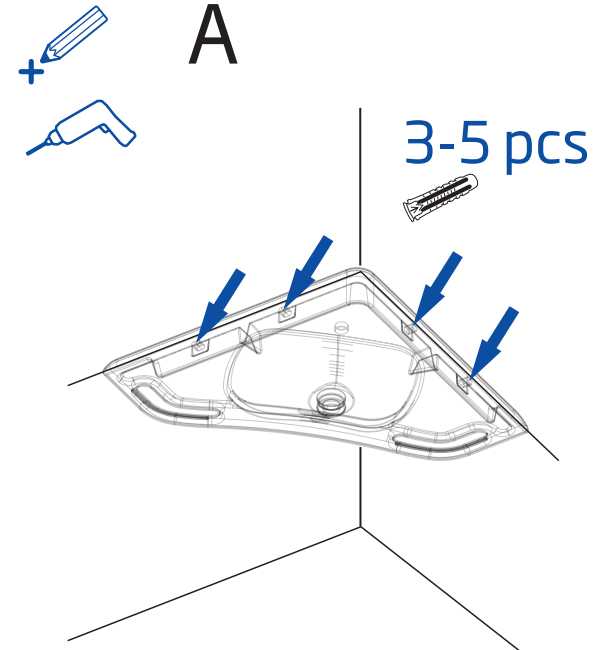

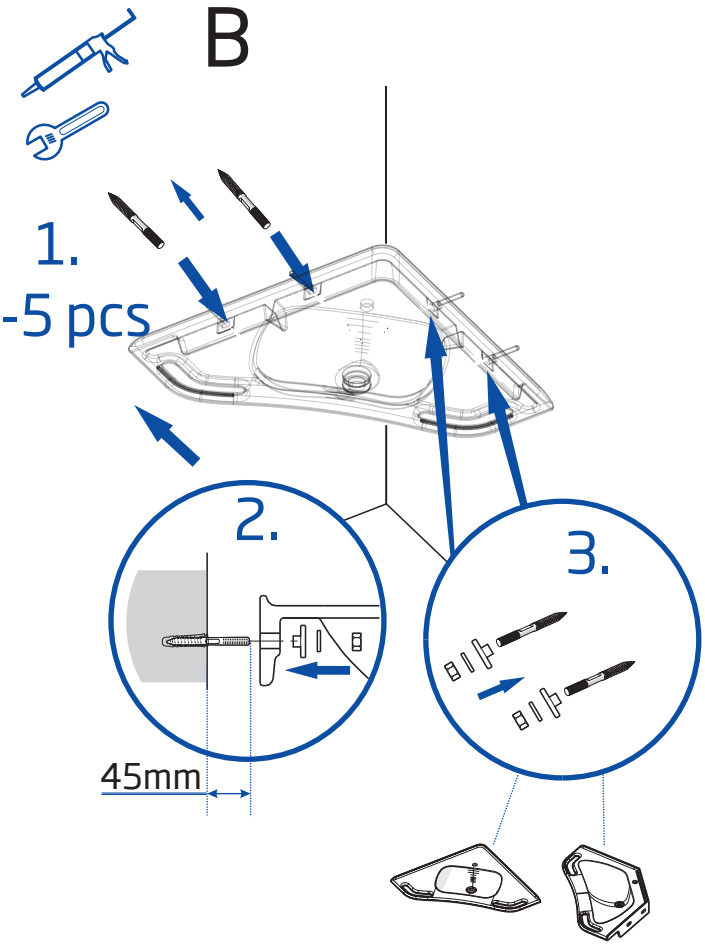

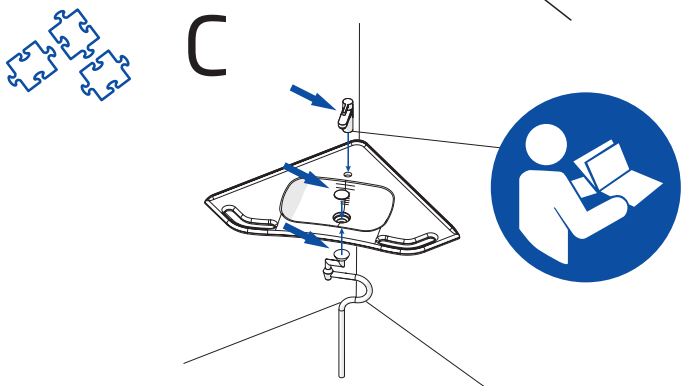

> korpinen.com
-installation instructions/water trap